Measuring the Passive Intermodulation Performance of RF Cable Assemblies

By, Rick Hartman

Table of Contents

1. Introduction to Passive IM:

As an increasing volume of voice and data information must pass through a fixed bandwidth in wireless communication systems, passive intermodulation distortion has become one factor which limits system capacity. Just as in active devices, passive intermodulation (IM) occurs when signals at two or more frequencies mix together in a non-linear fashion to produce spurious signals. When these spurious IM signals fall within the receive (uplink) band of a base station, receiver desensitization can occur. This can degrades call quality, or degrade the system C/I thus reducing the capacity of the communications system.

Passive IM is caused by a number of factors. A few of these include poor mechanical contact, ferrous content of conductors in the RF path, and contamination of the RF conducting surfaces. As it is difficult to predict the exact level of passive IM in a device, measured data is commonly used to characterize devices. Because IM performance can vary significantly with only minor changes in construction technique, some manufacturers are utilizing 100% production inspection of RF devices used in base station applications to ensure the passive IM levels are within specification.

Every component and subsystem located in the high power transmit path of a base station generates IM distortion when two or more frequencies are present. This paper focuses on just one such component: cable assemblies. Understanding that IM distortion generated within cable

assemblies is both directional and frequency dependent is an important factor in the specification and use of cable assemblies for communication base stations.

Understanding that IM distortion generated within cable assemblies is both directional and frequency dependent is an important factor in the specification and use of cable assemblies for communication base stations.

2. Measuring Cable IM Performance:

A cable assembly (or any two-port RF device) has two types of passive IM response; reflected and through. Figure 1 shows how the Kaelus Passive Intermodulation Analyzer measures these two IM signals. The SI-1900A test set injects two high power tones into the cable assembly at Port 1. The other end of the cable is connected to Port 2. Port 2 provides a termination for these two high power tones without generating significant levels of reflected passive IM. The reflected IM response is measured at Port 1. The through (or forward) IM response is measured at Port 2 of the analyzer. Unlike most passive IM test setups currently in use, the Kaelus IM analyzer supports the measurement of both the forward and reverse IM responses without re-cabling. This minimizes the measurement uncertainty between the reflected and through responses, by avoiding the mate and de-mates operations which would otherwise be required. This feature, when combined with the Kaelus analyzer's ability to make swept frequency IM measurements, allows the measurement of the cable's complete IM characteristics.

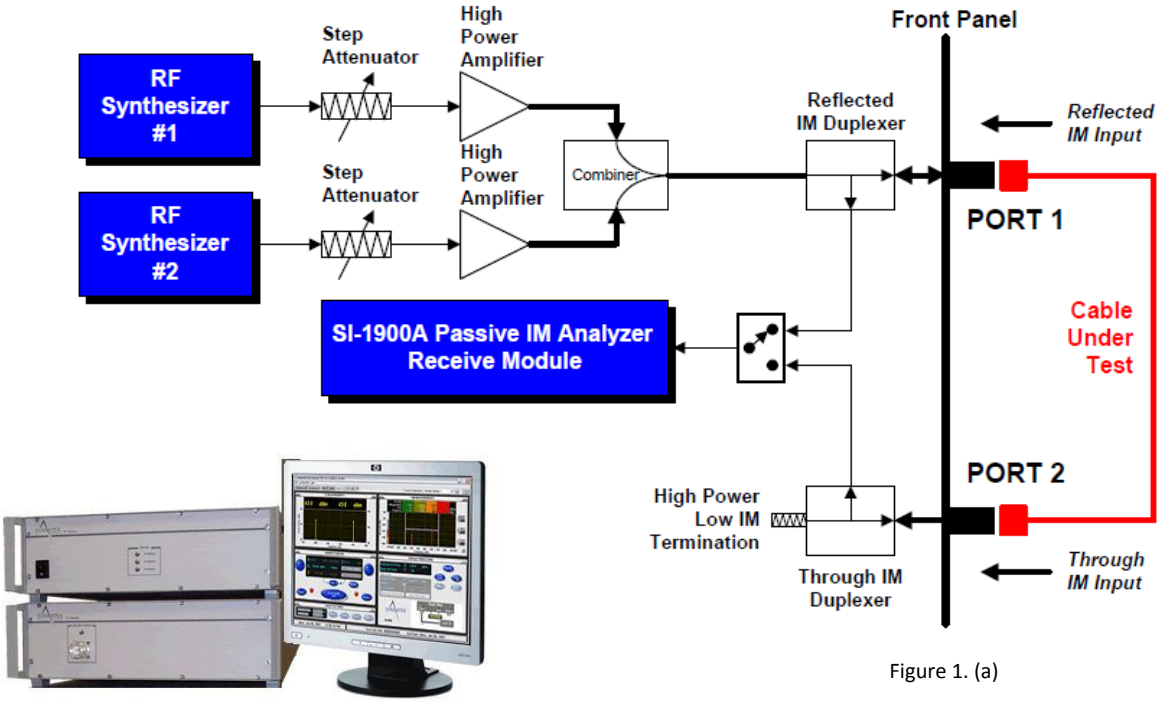

Figure 1. (a)

(b)

Figure 1. (a) Simplified block diagram of the Kaelus Passive IM Distortion Analyzer with the reflected and through IM Responses of Interest. (b) Photo showing the analyzer used to measure the cable assembly.

3. Cable IM Characteristics:

To understand the reflected and through IM characteristics of a cable assembly, it is helpful to consider the model shown in Figure 2.

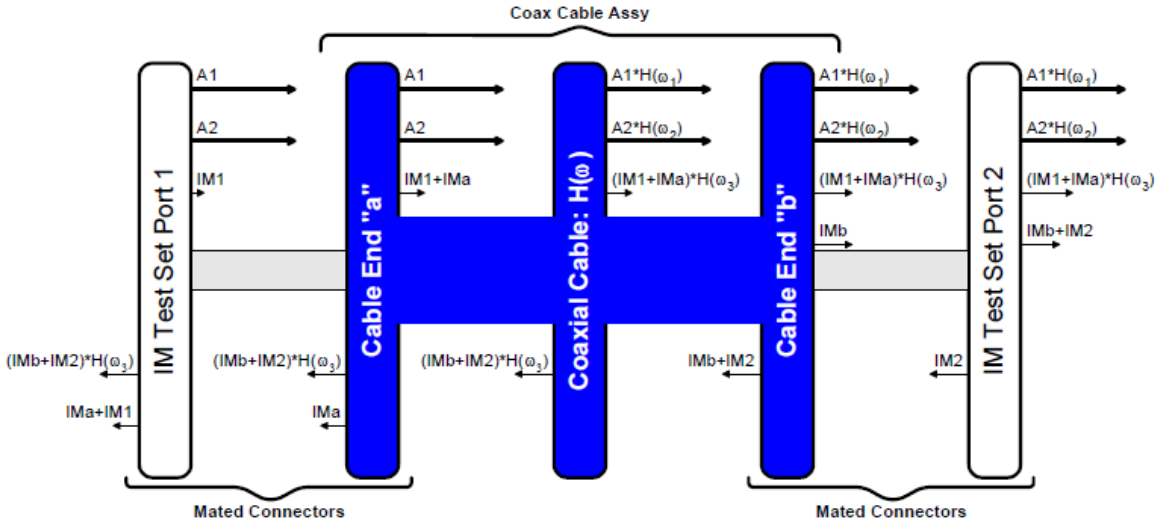

Figure 2. Model used to formulate the reflected and through IM response characteristics of a cable assembly.

In the center is the cable assembly itself. For this model, the points of IM generation within the cable assembly are assumed to be only at the connectors. That is, the cable alone does not contribute a significant amount of IM relative to the connectors. However, the cable alone does contribute loss and group-delay to the signals passing along its length. This is represented by the transfer function **H(ω)** in Figure 2.

The IM response from the cable assembly connectors is denoted by "**IMa**" and "**IMb**." For this model, it is assumed that IM is generated at a single point within each connector. Further, it is assumed that this IM, once generated, propagates with equal strength in both directions from the point of origin.

At the left-hand side of the model is Port 1. This is the port where the two +43dBm tones are injected into the cable assembly (see the block diagram in Figure 1a). These two tones are denoted by the "**A1**" and "**A2**" vectors in Figure 2. As the Passive IM Test Set also contributes IM to the measurement, this is denoted using the "**IM1**" vector. Note that the **IM1** response, like each of the IM responses in this model, propagate in both directions from their point of origin. It is assumed that the IM response from **Port 1** and the IM response from **Cable End "a"** are co-located. That is, the electrical distances between these two IM sources is negligible.

At the right-hand side of the model is **Port 2**. This port generates a small amount of undesired IM energy (denoted "**IM2**"). All of the assumptions which apply to Port 1 also apply equally to Port 2.

Considering the overall passive IM model for cable assembly measurement, some key items are worth noting:

- There are four IM responses incident upon each of the test ports. Two of these are from the connector ends, and two from the IM analyzer itself.
- The IM responses from Cable End "b" ("**IMb**") and Port 2 ("**IM2**") must propagate back through the cable to contribute to the reflected IM response measured at Port 1.
- The IM response from Cable End "a" ("**IMa**") and Port 1 ("**IM1**") must propagate through the cable to contribute to the through IM response measured at Port 2.

With this model, the expected IM behavior of a cable assembly can be determined.

4. Using the Model to Predict IM Characteristics:

Although predicting the absolute level of IM from a given RF device or component can be quite difficult, the interaction of the individual IM sources can be readily characterized with the model shown in Figure 2.

First, the equations for the third-order response from each of the IM sources are developed. Starting with the responses from Port 1 and Cable End "a", the IM responses are given by:

$$IM_1 = \sigma_1 e^{(2j\omega_1 t - j\omega_2 t)} = \sigma_1 e^{(j\omega_3 t)}$$

$$IM_a = \sigma_a e^{(2j\omega_1 t - j\omega_2 t)} = \sigma_a e^{(j\omega_3 t)}$$

Where the third-order IM frequency is defined by:

$$\omega_3 \equiv 2\omega_2 - \omega_1$$

Legend of symbols:

t .....is time
IM_1.....is the third order IM response from Port 1
IM_a.....is the third order IM response from Cable End "a"
σ_1.....is the IM coefficient for Port 1. This is simply the numeric conversion of the dBc response from Port 1(=10[dBc/20.])
σ_a .....is the IM coefficient for Port 1. This is simply the numeric conversion of the dBc response from Port 1(=10[dBc/20.])
$\omega_{1,2,3}$ .....are the radian frequencies of carriers number 1 and 2, and the radian frequency of the generated third order IM response, respectively.

The IM responses from Cable End "b" and Port 2 are slightly more complicated. These responses are generated by the two carriers after they have passed through the cable transfer function H(ω). To reduce the complexity of the resulting equations, and to eliminate impacts of non-linear power dependency of IM products with respect to their carriers, the cable will be assumed lossless. In equation form, this assumption may be expressed as:

$$|H(\omega)| = 1$$

The impact of this assumption on the accuracy of the model will become quite apparent when the final results are presented.

Even though the cable is assumed to be lossless, the group delay introduced by the cable is included in the model as follows:

$$H(\omega) = e^{(-jkv^{-1}L)}$$

Where:

k.....is the wave number associated with the frequency passing through the cable (2p/l)
v.....is the velocity of propagation of the coaxial cable
L.....is the length of the cable

The IM responses from Cable End "b" and Port 2 can now be expressed as:

$$IM_b = \sigma_b e^{2j(\omega_1 t - k_1 v^{-1} L)} e^{-j(\omega_2 t - k_2 v^{-1} L)} = \sigma_b e^{j(\omega_3 t - k_3 v^{-1} L)}$$

$$IM_2 = \sigma_2 e^{2j(\omega_1 t - k_1 v^{-1} L)} e^{-j(\omega_2 t - k_2 v^{-1} L)} = \sigma_2 e^{j(\omega_3 t - k_3 v^{-1} L)}$$

With the expressions for IMa, IM1, IMb, and IM2 available, the complete expression for the total *through* (forward) IM arriving at Port 2 may be expressed as:

Forward IM (at Port 2) $= H(\omega)*(IM_a + IM_1) + IM_b + IM_2$

$$= e^{-j(kv^{-1}L)}(\sigma_a e^{j\omega_3 t} + \sigma_1 e^{j\omega_3 t}) + \sigma_b e^{j(\omega_3 t - k_3 v^{-1} L)} + \sigma_2 e^{j(\omega_3 t - k_3 v^{-1} L)}$$

$$= (\sigma_1 + \sigma_a + \sigma_b + \sigma_2) e^{j(\omega_3 t - k_3 v^{-1} L)}$$

This expression shows that all four IM responses arrive in-phase at Port 2 of the IM test set, independent of the IM frequency. Assuming the individual IM sources are frequency independent, and the loss of the cable is constant with frequency, the through IM response of the complete cable assembly is expected to be frequency independent.

A similar process may now be used to characterize the reflected IM response. The reflected response is given by:

Reflected IM (at Port 1) $= IM_a + IM_1 + H(\omega) * (IM_b + IM_2)$

This reduces to:

Reflected IM (at Port 1) $= \sigma_a e^{j\omega_3 t} + \sigma_1 e^{j\omega_3 t} + e^{-j(kv^{-1}L)} [\sigma_b e^{j(\omega_3 t - k_3 v^{-1} L)} + \sigma_2 e^{j(\omega_3 t - k_3 v^{-1} L})]$

$$= [(\sigma_1 + \sigma_a) + (\sigma_b + \sigma_2) e^{-2jk_3 v^{-1} L}] e^{j(\omega_3 t)}$$

This expression shows that the reflected IM response present at Port 1 is a combination of the Port 1 and Cable End "a" responses plus a phase-shifted response due to the combination of Cable End "b" and Port 2's IM responses. Because there is a vector combination of IM sources with differing phases, it is expected that the reflected IM response is a function of both frequency and the electrical length of the cable assembly.

5. Measured Cable Assembly IM Response:

To validate the model, a typical jumper cable assembly used in wireless applications was measured using the SI-1900A Passive Intermodulation Distortion Analyzer. The cable assembly is 1.5 meters in length with a manufacturer-specified velocity factor of 82 percent. The cable assembly is equipped with DIN 7-16 male connectors on both ends. The carrier power is set at 20 Watts (per carrier). The analyzer's ALC capability ensures the carrier power varies by no more than 0.2dB throughout the test. The noise floor of the analyzer is better than -140dBm. The IM noise floor of the analyzer is better than -163dBc at a +43dBm carrier power.

Figure 3 shows the measured results and the corresponding predicted curves for both the reflected and through IM responses. The level of the IM response from each cable end is estimated for the theoretical model by assuming the through response consists of the sum of two equal amplitude IM sources from each end. The level of the reflected IM response is determined solely by the model, and is not adjusted to match the measured data.

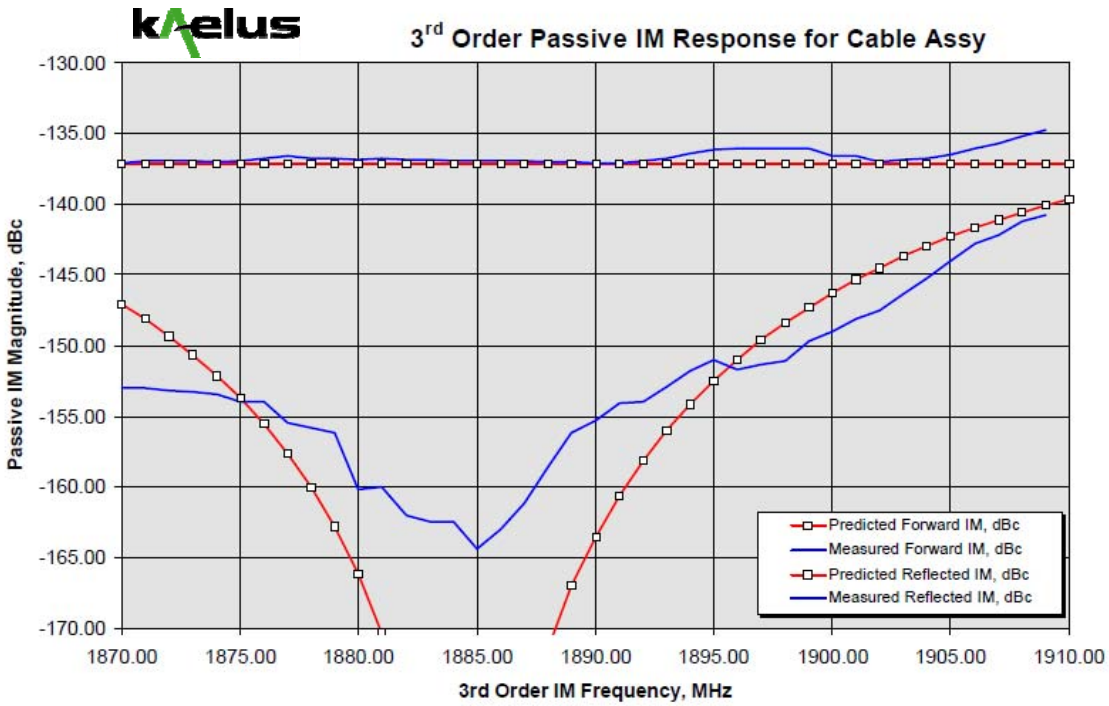

Figure 3. Measured and predicted cable assembly passive intermodulation distortion.

As Figure 3 shows, the overall behaviors of the through and reflected responses follow the trend predicted by the model. However, the depth of the null in the reflected IM response is much deeper in the predicted data than for the actual measured data. This is most likely due to the following differences between the simplified assumptions used for the model and the actual cable characteristics:

- The IM sources are assumed identical amplitude in the model. The actual IM responses from each end of the cable are most likely not exactly equal in amplitude to each other. This results in a better null being produced by the model than shown by the measured data.
- The cable is assumed lossless in the simplified model. This allows the IM at one end of the cable to appear at the opposing end of the cable with its original amplitude. In the actual measurement, the IM from one end of the cable undergoes some loss before reaching the opposing port. This can cause the two cable IM responses to differ thus creating a shallower null.

- The IM responses from the test set are assumed to be co-located with the cable connector responses. In the actual measurement, these are separated by 3 cm due to the use of connector savers (plug-to-jack adapters) on Port 1 and Port 2 of the test set. This produces additional IM responses at approximately the level of the measured null depth.

6. Conclusions:

Despite the passive IM model's simplicity, the overall reflected and through IM behavior of the cable is correctly predicted. The difference in results noted between the model and the measurements are readily explained.

Engineers responsible for overall system performance or component IM characteristics can apply these results to help understand passive IM measurements in both the field and in the lab. Conclusions based on these results include:

- If the cable is low loss, and the IM from each cable end is expected to be similar, the measured through IM response is typically 6 dB greater than the response from either cable end and is mostly frequency independent. This response represents the maximum (or close to maximum) IM response which will be produced by the cable in either a reflected or through IM measurement.

- If a reflected IM measurement is made on this same low-loss cable, the measured IM level changes with the IM frequency. Consequently, single frequency, reflected IM measurements may not indicated the true impact of passive IM distortion on overall system performance.

- A judicious selection of cable lengths can result in destructive interference between IM sources thus producing a low overall system IM response. This characteristic might be used to select jumper cable lengths between the transmitter rack and a bulkhead panel in a base station 'dog house' for a particular operator's frequency block allocation.

- It is possible that a large magnitude IM response at the end of a long cable can combine with a low-IM response at opposing end of a cable assembly to produce highly frequency dependent reflected IM response. This condition might be found on a base station with a large IM signal returning from a defective or poorly designed antenna or moisture penetration in a cable.

- As a coaxial cable changes temperature (as can occur from cable losses or sunlight striking a cable), the electrical length of the cable will change. The magnitude of this change will be greater for cables with smaller velocity factors. As the cable changes length, the IM level appearing on the receive port of a base station duplexer will change due to the changes in phasing between multiple IM sources. This may result in capacity changes in the base station as the IM level increases and decreases as a function of temperature.

Although an RF cable assembly has been used as an example for this evaluation, the results may be readily extended to an arbitrary two-port device. By defining $H(\omega)$ to represent the transfer function of the device, the expected IM characteristics associated with a duplexer, filter, or antenna may also be determined.

Americas
+1.303.768.8080

Asia Pacific, Africa
+61.(0).7.3907.1200

China
+86.21.6084.2200

Europe, Middle East, India
+44.(0).1383.410386

info@kaelus.com